Optimization Model for Scheduling of a Lube-Oil Production Plant

Sanjeev Yadav

***Abstract*—In this paper, a short-term scheduling model is developed for lube-oil production plant using unit-specific event-based continuous time representation and state-task-network (STN) based process representation. Important operational features of a lube-oil production plant such as stream splitting, stream addition, intermediate storage management, product changeover, and continuous feed stream are addressed in much simpler way using STN. The resulting model is a mixed integer linear programming (MILP) model which is solved using GAMS software.**

***Index Terms*—Mixed integer linear programming (MILP), short-term scheduling, state-task-network (STN) representation, unit-specific event-based representation.**

I. Introduction

Generally plant that produces lube-oil involves continuous processes and the scheduling of continuous process typically involves handling of continuous production including continuous and non-continuous units, product changeover, inventory management, and handling of processing times. During the last couple of decades, numerous formulations have been proposed in the literature on the basis of different time representation for scheduling of continuous process. Floudas and Lin [1] presented an extensive review on these formulations and showed that unit-specific event- based formulations were computationally most efficient and generating higher quality of solution.

Shaik and Floudas [2] proved to be most significant work for continuous processes in terms of precisely addressing inventory issues and product changeovers. Prior to that, Ierapetritou and Floudas [3] presented work on unit-specific event-based representation for scheduling of continuous and semi-continuous processes. Giannelos and Georgiadis [4] also used unit-specific event-based representation to model the scheduling problem of continuous process. But these works exhibited limitation vis-a-vis intermediate storage which were later improved by Shaik and Floudas [2] and Shaik *et al.* [5].

In the context of lube-oil production plant, Liza and Pinto [6] presented two mixed-integer linear programming (MILP) models based on discrete and continuous time based formulations and it compared the results of these two formulations. Shaik *et al.* [7] proposed cyclic schedule for a typical lube- production plant using discrete time representation. Another relevant work for lube-oil production is Joly and Pinto [8] in which the problem is first modeled as as non-convex mixed-integer non-linear programming (MINLP) and then converted into mixed-integer linear programming model using linearization techniques.

In this paper, we aim to develop short-term scheduling model for lube-oil production plant using STN process representation and unit-specific event-based representation. The proposed work is organized as follows. The production system and problem definition for lube-oil is introduced in Section II. In Section III, the STN representation is presented. In Section IV, mathematical formulation for short-term scheduling is presented. This is followed by results and discussion in Section V. Section VI summarizes the work and provides some concluding remarks.

II. Problem Definition

The lube-oil production system is a network of several units operating in series and parallel configurations for processing the crude-mix from distillation units into lube oil as shown in Fig. 1.

For the problem considered, four grades A-D are produced through a three-stage production process including Extraction, Dewaxing, and Hydrogenation stages. Continuous feed to the Extraction stage comes from the Distillation unit of the upstream plant. In the Extraction stage, there are two parallel units which are followed by Dewaxing and Hydrogenation stages.

Dewaxing and Hydrogenation stages have only one unit.

With the exception of grade B, which can be produced in both the units of extraction stage, all other grades have to be processed only in one unit at each stage. Grade A can be processed only in unit 1; while grade B can be processed either in unit 1 or unit 2. Grade C and D can be processed in unit 2 at extraction stage. Unit 3 and unit 4 can process all the four grades consecutively. There are dedicated storage tanks for each continuous feed stream from the plant. Two consecutive stages are separated by intermediate storage tanks which are dedicated in nature. The following is the key information available: 1) production recipe for each final product, 2) yields of different products on different units at each stage, 3) maximum and minimum flow rates for each production unit, 4) maximum and minimum storage capacities for intermediate storage tanks, 5) sequence dependent changeover times, 6) demand profile for final products, 7) total time horizon for scheduling.

Given the above information, the aim of the proposed scheduling model is to determine: 1) the optimal sequencing

Manuscript received December 9, 2013; revised February 19, 2014.

Sanjeev Yadav is with Department of Chemical Engineering, Shiv Nadar University, Village Chithera, Tehsil Dadri, Dist. Gautam Budhnagar-203207, Uttar Pradesh, India (email: Sanjeev.yadav@snu.edu.in; tel.: 91-9911419807).

of each product in each unit at each stage, 2) start and finish times of each operation, 3) amount processed in each operation, 4) inventory profiles for each intermediate storage tank, thus maximizing the revenue generated.

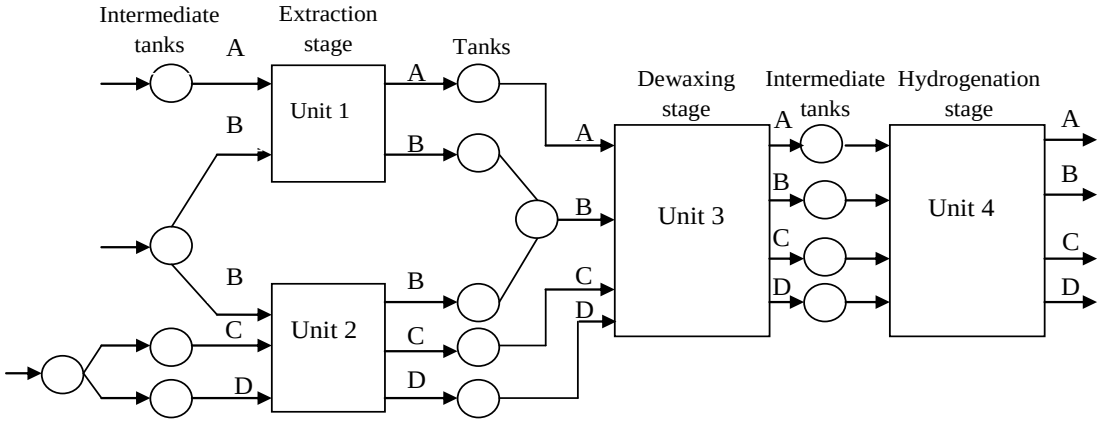

Fig. 1. Flow diagram of lube-oil production system.

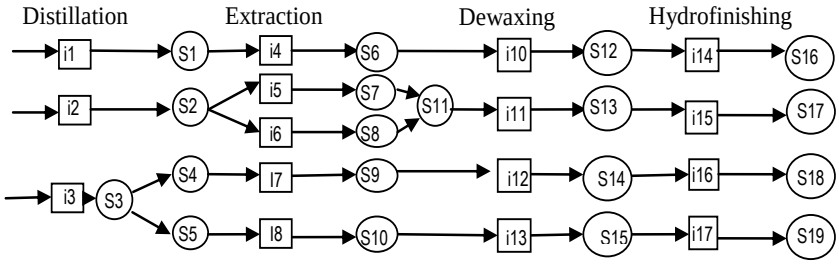

Fig. 2. STN Representation of lube production system.

III. STN Representation

Traditionally, tasks are normally defined based on the different processing operations occurring in a unit but in the proposed STN of Fig. 2, fluid movement from one tank to another tank and material storage in the intermediate tanks are also considered as tasks. In order to effectively handle the continuous flow stream from distillation, three flow tasks *i1-i3* are defined. Several processing tasks *i5-i17* are defined to effectively deal with the operation of each unit in the refinery system. Material stored in the intermediate storage tanks is treated as intermediate states and the final product as final state.

IV. Mathematical Formulation

The proposed mathematical formulation for the refinery production system involves several constraints including sequencing constraints, material balance constraints, allocation constraints, capacity constraints, duration constraints, and demand constraints.

A. Allocation Constraints

$$\sum_{i \in Ij} w(i,n) \le 1 \quad \forall j \in J_p, n \in N \tag{A.1}$$

$$w(i_{st}, n+1) \ge w(i_{st}, n) + z(i_{st}, n) - 1$$

$$\forall i_{st} \in I_{st}, n \in N, n < N \tag{A.2}$$

Constraint (A.1) states that at the most only one task can take place in a processing unit at event n. Constraint (A.2) states that if a storage task is active and it stores a nonzero amount at event n, then the same storage task should be active at next event point n+1 as well.

B. Capacity Constraints

$$f_{i_p}^{\min}(T_f(i_p,n) - T_s(i_p,n)) \le b(i_p,n) \tag{B.1}$$

$$f_{i_p}^{\max}(T_f(i_p,n) - T_s(i_p,n)) \ge b(i_p,n) \tag{B.2}$$

$$b(i_{st},n) \le st_{i_{st}}^{\max} w(i_{st},n) \quad \forall i_{st} \in I_{st}, n \in N \tag{B.3}$$

$$b(i_{st},n) \le st_{i_{st}}^{\max} z(i_{st},n) \quad \forall i_{st} \in I_{st}, n \in N \tag{B.4}$$

Capacity constraints (B.1)-(B.2) put the limit on the quantity of a material that can be processed, while (B.3) limits the quantity stored by a storage task at event point n. In (B.4), different binary variable $z(i_{st},n)$is used to confine only those instances when nonzero amount is stored at event point n.

C. Duration Constraints

$$T_f(i,n) \le T_s(i,n) + Hw(i,n) \quad \forall i \in I, n \in N \tag{C.1}$$

$$T_f(i_{st},n) \ge T_s(i_{st},n) \quad \forall i_{st} \in I_{st}, n \in N \tag{C.2}$$

Constraint (C.1) states that the finishing time of a task should be less than or equal to the start time of the task if that task is active at event point n, while (C.2) states that finish time of storage task should always be greater than its start time.

D. Material Balances

$$b(i_p,n) = \sum_u b1(u,n) \quad \forall i_p \in I_s, n \in N \tag{D.1}$$

$$b(i_p,n)=\sum_v b2(v,n) \qquad \forall i_p \in I_s, n \in N \qquad \text{(D.2)}$$

Since a continuous stream is split into two streams to feed to two different storage tanks, we use (D.1) for splitting the continuous stream. Similarly outflows from two different tanks are added before processing in the forthcoming unit in (D.2) for adding the streams.

E. Material Balance for Intermediate States

$$\sum_{i_{st}\in I_s} b(i_{st},n)=st0_s+\sum_{i_p\in I_s{}^p}\rho_{i,s}b(i_p,n)+\sum_{i_p\in I_s{}^c}\rho_{i,s}b(i_p,n)$$
$$\forall s\in S^{IN}, n\in N, n=1 \qquad \text{(E.1)}$$

$$\sum_{i_{st}\in I_s} b(i_{st},n)=\sum_{i_{st}\in I_s} b(i_{st},n-1)+\sum_{i_p\in I_s{}^p}\rho_{i,s}b(i_p,n)+\sum_{i_p\in I_s{}^c}\rho_{i,s}b(i_p,n)$$
$$\forall s\in S^{IN}, n\in N, n>1 \qquad \text{(E.2)}$$

Constraints (E.1) and (E.2) are written for only those intermediate states which are not generated by splitting a stream or by adding two streams (discussed earlier in D.1-D.2)

$$\sum_{i_{st}\in I_s} b(i_{st},n)=st0_s+b1(u,n)+\sum_{i_p\in I_s{}^c}\rho_{i,s}b(i_p,n)$$
$$\forall s\in S^{IM2}, u\in U, n\in N, n=1 \qquad \text{(E.3)}$$

$$\sum_{i_{st}\in I_s} b(i_{st},n)=\sum_{i_{st}\in I_s} b(i_{st},n)+b1(u,n)+\sum_{i_p\in I_s{}^c}\rho_{i,s}b(i_p,n)$$
$$\forall s\in S^{IM2}, u\in U, n\in N, n>1 \qquad \text{(E.4)}$$

Constraints (E.3)–(E.4) are only written for those intermediate state that are generated by splitting a continuous stream from CDU, while (E.5)-(E.6) are written for those intermediate state that are added to generate a new state.

$$\sum_{i_{st}\in I} b(i_{st},n)=st0_s+\sum_{i_p\in I_s{}^p} b(i_p,n)-b2(v,n)$$
$$\forall s\in S^{IM4}, v\in V, n\in N, n=1 \qquad \text{(E.4)}$$

$$\sum_{i_{st}\in I_s} b(i_{st},n)=\sum_{i_{st}\in I_s} b(i_{st},n-1)+\sum_{i_p\in I_s{}^p}\rho_{i,s}b(i_p,n)-b2(v,n)$$
$$\forall s\in S^{IM4}, v\in V, n\in N, n>1 \qquad \text{(E.6)}$$

$$b(i_{st},n)\ge st_{i_{st}}^{\min} w(i_{st},n) \qquad \forall i_{st}\in I_s, n\in N$$

F. Sequencing Constraints

1) Same task in the same unit

$$T_s(i,n+1)\ge T_f(i,n) \quad \forall i\in I_s, n\in N, n<N \qquad \text{(F.1.1)}$$

2) Different tasks in the same unit

$$T_s(i_p,n+1)\ge T_f(i_p^{'},n)$$
$$\forall j\in J, i_p, i_p^{'}\in I_j, i_p\ne i_p^{'}, n\in N, n<N \qquad \text{(F.2.1)}$$

Constraint (F.2.1) is applicable when there is no changeover but for sequence-dependent changeovers, (F.2.2) is applicable

$$T_s(i_p,n+1)\ge T^f(i_p^{'},n')+t^c_{i_p,i_p^{'}}w(i_p,n)-H(1-w(i_p^{'},n'))-H\sum_{i''}\sum_{n'<n''<n} w(i_p^{''},n'')$$
$$\forall j\in J, i_p, i_p^{'}\in I_j, i_p\ne i_p^{'}, n,n'\in N, n>n' \qquad \text{(F.2.2)}$$

3) Different tasks in different units

The start time of the storage task must be equal to the start time of the producing task as stated in (F.3.1)-(F.3.6). Constraints (F.3.1)-(F.3.2) are applicable for all those intermediate states which are not generated by splitting a state or by adding states.

$$T_s(i_{st},n)\ge T_s(i_p,n)-H(2-w(i_{st},n)-w(i_p,n))$$
$$\forall s\in S^{in}, i_{st}\in I_s, i_p\in I_s^p, n\in N \qquad \text{(F.3.1)}$$

$$T_s(i_{st},n)\le T_s(i_p,n)+H(2-w(i_{st},n)-w(i_p,n))$$
$$\forall s\in S^{in}, i_{st}\in I_s, i_p\in I_s^p, n\in N \qquad \text{(F.3.2)}$$

$$T_s(i_{st},n)\ge T_s(i_p,n)-H(2-w(i_{st},n)-w(i_p,n))$$
$$\forall s\in S^{im2}, s'\in S^{im0}, i_{st}\in I_s, i_p\in I_{s'}^p, \xi_{s,s'}, n\in N \qquad \text{(F.3.3)}$$

$$T_s(i_{st},n)\le T_s(i_p,n)+H(2-w(i_{st},n)-w(i_p,n))$$
$$\forall s\in S^{im2}, s'\in S^{im0}, i_{st}\in I_s, i_p\in I_{s'}^p, \xi_{s,s'}, n\in N \qquad \text{(F.3.4)}$$

Constraints (F.3.3)-(F.3.4) are applicable for all those intermediate states which are generated by splitting a state.

$$T_s(i_{st},n)\ge T_s(i_p,n)-H(2-w(i_{st},n)-w(i_p,n))$$
$$\forall s\in S^{im4}, i_{st}\in I_s, i_p\in I_s^p, n\in N \qquad \text{(F.3.5)}$$

$$T_s(i_{st},n)\le T_s(i_p,n)+H(2-w(i_{st},n)-w(i_p,n))$$
$$\forall s\in S^{im4}, i_{st}\in I_s, i_p\in I_s^p, n\in N \qquad \text{(F.3.6)}$$

For ($w(i_p,n)$=0 and ($z(i_{st}, n)$=1), the start time of the storage task should be equal to finish time of the same task at previous event as stated in (F.3.7) and (F.3.9).

$$T_s(i_{st},n)\le T_f(i_{st},n-1)+H(1-z(i_{st},n)+w(i_p,n))$$
$$\forall s\in S^{in}, i_{st}\in I_s, i_p\in I_s, n\in N, n>1 \qquad \text{(F.3.7)}$$

$$T_s(i_{st},n)\le T_f(i_{st},n-1)+H(1-z(i_{st},n)+w(i_p,n))$$
$$\forall s\in S^{im2}, s'\in S^{im0}, i_{st}\in I_s, i_p\in I_s^c\cup i_p\in I_{s'}^p, \xi_{s,s'}, n\in N, n>1 \qquad \text{(F.3.8)}$$

$$T_s(i_{st},n)\le T_f(i_{st},n-1)+H(1-z(i_{st},n)+w(i_p,n))$$
$$\forall s\in S^{im2}, s'\in S^{im0}, i_{st}\in I_s, i_p\in I_s^c\cup i_p\in I_{s'}^p, \xi_{s,s'}, n\in N, n>1 \qquad \text{(F.3.9)}$$

Constraints (F.3.10)-(5.42) state that the finish time of storage task should be greater than the finish times of producing and consuming tasks of the state *s*.

$$T_f(i_{st},n)\ge T_f(i_p,n)-H(2-w(i_{st},n)-w(i_p,n))$$
$$\forall s\in S^{in}, i_{st}\in I_s, i_p\in I_s, n\in N, n>1 \qquad \text{(F.3.10)}$$

$$T_f(i_{st},n)\ge T_f(i_p,n)-H(2-w(i_{st},n)-w(i_p,n))$$
$$\forall s\in S^{im2}, s'\in S^{im0}, i_{st}\in I_s, i_p\in I_s^c\cup i_p\in I_{s'}^p, \xi_{s,s'}, n\in N \qquad \text{(F.3.11)}$$

$$T_f(i_{st},n) \geq T_f(i_p,n) - H(2 - w(i_{st},n) - w(i_p,n))$$
$$\forall s \in S^{im4}, s' \in S^{im0}, i_{st} \in I_s, i_p \in I_s^p \cup i_p \in I_{s'}^c, \xi_{s,s'}, n \in N \quad \text{(F.3.12)}$$

If the amount stored is zero ($z(i_{st},n)$=0), then the finish time of storage task should be same as the finish time of corresponding consuming tasks according to (F.3.13)- (5.45) and (5.40)-(5.42).

$$T_f(i_{st},n) \leq T_f(i_p,n) + H(2 - w(i_{st},n) - w(i_p,n)) + Hz(i_{st},n)$$
$$\forall s \in S^{in}, i_{st} \in I_s, i_p \in I_s^c, n \in N \quad \text{(F.3.13)}$$

$$T_f(i_{st},n) \leq T_f(i_p,n) + H(2 - w(i_{st},n) - w(i_p,n)) + Hz(i_{st},n)$$
$$\forall s \in S^{im2}, i_{st} \in I_s, i_p \in I_s^c, n \in N \quad \text{(F.3.14)}$$

$$T_f(i_{st},n) \leq T_f(i_p,n) + H(2 - w(i_{st},n) - w(i_p,n)) + Hz(i_{st},n)$$
$$\forall s \in S^{im4}, s' \in S^{im0}, i_{st} \in I_s, i_p \in I_{s'}^c, \xi_{s,s'}, n \in N \quad \text{(F.3.15)}$$

However, if the amount stored is nonzero ($z(i_{st},n)$=1), then it remains in storage until the next processing task starts, as stated in (F.3.16) and (F.3.17).

$$T_f(i_{st},n) \geq T_f(i_p,n+1) - H(2 - w(i_{st},n) - w(i_p,n+1)) - H(1 - z(i_{st},n))$$
$$\forall s \in S^{in}, i_{st} \in I_s, i_p \in I_s, n \in N, n < N \quad \text{(F.3.16)}$$

$$T_f(i_{st},n) \leq T_f(i_p,n+1) + H(2 - w(i_{st},n) - w(i_p,n+1)) + H(1 - z(i_{st},n))$$
$$\forall s \in S^{in}, i_{st} \in I_s, i_p \in I_s, n \in N, n < N \quad \text{(F.3.17)}$$

$$T_f(i_{st},n) \geq T_f(i_p,n+1) - H(2 - w(i_{st},n) - w(i_p,n+1)) - H(1 - z(i_{st},n))$$
$$\forall s \in S^{im2}, s' \in S^{im0}, i_{st} \in I_s, i_p \in I_s^c \cup i_p \in I_{s'}^p, \xi_{s,s'}, n \in N, n < N \quad \text{(F.3.18)}$$

$$T_f(i_{st},n) \leq T_f(i_p,n+1) + H(2 - w(i_{st},n) - w(i_p,n+1)) + H(1 - z(i_{st},n))$$
$$\forall s \in S^{im2}, s' \in S^{im0}, i_{st} \in I_s, i_p \in I_s^c \cup i_p \in I_{s'}^p, \xi_{s,s'}, n \in N, n < N \quad \text{(F.3.19)}$$

$$T_f(i_{st},n) \geq T_f(i_p,n+1) - H(2 - w(i_{st},n) - w(i_p,n+1)) - H(1 - z(i_{st},n))$$
$$\forall s \in S^{im4}, s' \in S^{im0}, i_{st} \in I_s, i_p \in I_s^p \cup i_p \in I_{s'}^c, \xi_{s,s'}, n \in N, n < N \quad \text{(F.3.20)}$$

$$T_f(i_{st},n) \leq T_f(i_p,n+1) + H(2 - w(i_{st},n) - w(i_p,n+1)) + H(1 - z(i_{st},n))$$
$$\forall s \in S^{im4}, s' \in S^{im0}, i_{st} \in I_s, i_p \in I_s^p \cup i_p \in I_{s'}^c, \xi_{s,s'}, n \in N, n < N \quad \text{(F.3.21)}$$

$$T_f(i_{st},n) \geq Hz(i_{st},n) \quad \forall i_{st} \in I_s, n = N \quad \text{(F.3.22)}$$

For finish time of storage task at last event (F.3.22) is used which states that since there are no more tasks after last event, the storage task continues to hold the non-zero amount till the end of the horizon.

In case of bypassing not allowed, the start time of consuming task should be greater than start time of storage task as stated in (F.3.23)-(F.3.25).

$$T_s(i_p,n) \geq T_s(i_{st},n) - H(2 - w(i_{st},n) - w(i_p,n))$$
$$\forall s \in S^{in}, i_{st} \in I_s, i_p \in I_s^c, n \in N \quad \text{(F.3.23)}$$

$$T_s(i_p,n) \geq T_s(i_{st},n) - H(2 - w(i_{st},n) - w(i_p,n))$$
$$\forall s \in S^{im2}, i_{st} \in I_s, i_p \in I_s^c, n \in N \quad \text{(F.3.24)}$$

$$T_s(i_p,n) \geq T_s(i_{st},n) - H(2 - w(i_{st},n) - w(i_p,n))$$
$$\forall s \in S^{im4}, s' \in S^{im0}, i_{st} \in I_s, i_p \in I_{s'}^c, \xi_{s.s'}, n \in N \quad \text{(F.3.25)}$$

The finish time of the consuming task for state s must also be later than the finish time of the corresponding producing task as stated in (F.3.26)-(F.3.28).

$$T_f(i_p,n) \geq T_f(i_p^{'},n) - H(2 - w(i_p^{'},n) - w(i_p,n))$$
$$\forall s \in S^{in}, i_p \in I_s^c, i_p^{'} \in I_s^p, n \in N \quad \text{(F.3.26)}$$

$$T_f(i_p,n) \geq T_f(i_p^{'},n) - H(2 - w(i_p^{'},n) - w(i_p,n))$$
$$\forall s \in S^{im2}, s' \in S^{im0}, i_p \in I_s^c, i_p^{'} \in I_{s'}^p, \xi_{s,s'}, n \in N \quad \text{(F.3.27)}$$

$$T_f(i_p,n) \geq T_f(i_p^{'},n) - H(2 - w(i_p^{'},n) - w(i_p,n))$$
$$\forall s \in S^{im4}, s' \in S^{im0}, i_p \in I_s^p, i_p^{'} \in I_{s'}^c, \xi_{s,s'}, n \in N \quad \text{(F.3.28)}$$

G. Tightening Constraint for Continuous Operation in a Unit

$$\sum_n \sum_{i_p \in I_{jc}} (T_f(i_p,n) - T_s(i_p,n)) = H \qquad \forall J \in J_c \quad \text{(G.1)}$$

Constraint (G.1) enforces the condition that for the units which must operate continuously the summation of the duration of all tasks taking place in that unit should be equal to the total time horizon.

H. Constraint for No Simultaneous Processing in Two Parallel Units

$$T_s(i_p,n) \geq T_f(i_p^{'},n) - H(1 - w(i_p,n))$$
$$\forall i_p \in I_s^c, i_p^{'} \in I_s^p, i_p \neq i_p^{'}, n \in N \quad \text{(H.1)}$$

Constraint (H.1) is needed for satisfying the condition that some processing tasks cannot occur in parallel units simultaneously.

I. Changeover Constraints

The following change-over (5.80)-(5.83) are taken from Shaik *et al.* (2009).

$$x(i_p^{'},i_p,n) \leq w(i_p^{'},n) \quad \forall i_p, i_p^{'} \in I_j, i_p \neq i_p^{'}, n \in N \quad \text{(I.1)}$$

$$x(i_p^{'},i_p,n) \leq w(i_p,n') + \{1 - \sum_{i'' \in I_j} w(i_p^{''},n')\} + \sum_{i'' \in I_j} \sum_{n<n''<n'} w(i_p^{''},n'') \quad \text{(I.2)}$$

$$\forall i_p, i_p^{'}, i_p \neq i_p^{'}, n < N, n < n' < N \quad \text{(I.3)}$$

$$x(i_p^{'},i_p,n) \geq w(i_p^{'},n) + w(i_p,n') - 1 - \sum_{i'' \in I_j} \sum_{n<n''<n'} w(i'',n'')$$

$$\forall i_p, i_p^{'}, i_p \neq i_p^{'}, n < N, n < n' < N \quad \text{(I.4)}$$

J. Demand Constraint

$$\sum_n \sum_{i_p \in I_s^p} \rho_{i,s} b(i_p,n) \geq DM(s) \qquad \forall s \in S^p \quad \text{(J.1)}$$

K. Objective Function

$$profit = \sum_n \sum_{i_p \in I_s^p} \rho_{i_p,s} b(i_p,n) - I_c \sum_n \sum_{i_{st}} b(i_{st},n) - C_{trans} \sum_n \sum_{i_p} \sum_{i_p^{'}} w_t(i_p,i_p^{'},n)$$
$$- C_1 \sum_{i \in I} \sum_n w(i,n) - C_2 \sum_{i_{st} \in I_{st}} \sum_n z(i_{st},n) \quad \text{(K.1)}$$

The objective is maximization of profit. The first term in the objective function is the revenue from sale of final products, second term represents the inventory cost, third term represents changeover cost, and the last two terms are used for penalizing all the binary variables used.

V. Results and Discussion

The data on product yields, processing rates, and transition times are taken from Shaik *et al.* (2003).

The flow rates of continuous streams from the distillation are fixed: 21, 28, and 33 m3/hr., respectively. The time horizon considered here is 60 hr. and the demands of A-D are 314.22, 504.84, 59.5, and 59.5 respectively. Prices of the final products are 0.35, 0.50, 0.25, and 0.50 k$/m3. The transition costs are k$ 3.50 for all grades in all units and stages except between grade C and D for which there is no transition cost. The inventory costs are assumed to be 0.005k$/m^3. The transition between one intermediate grade to the next involves a transition period.

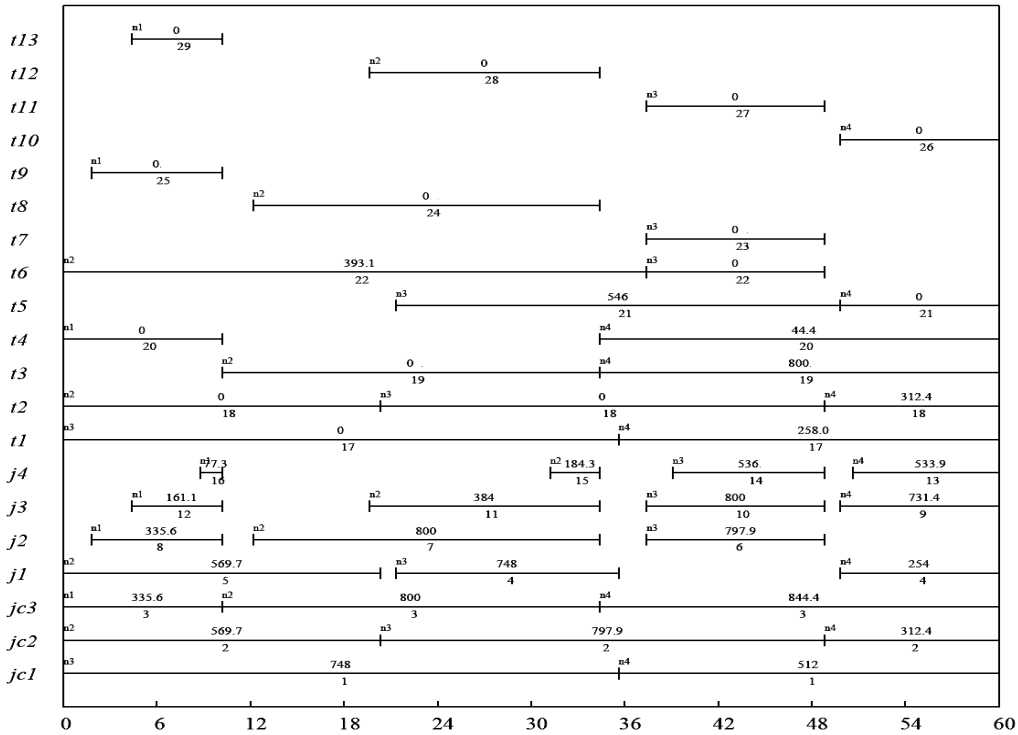

Fig. 3. Gantt chart for scenario 1.

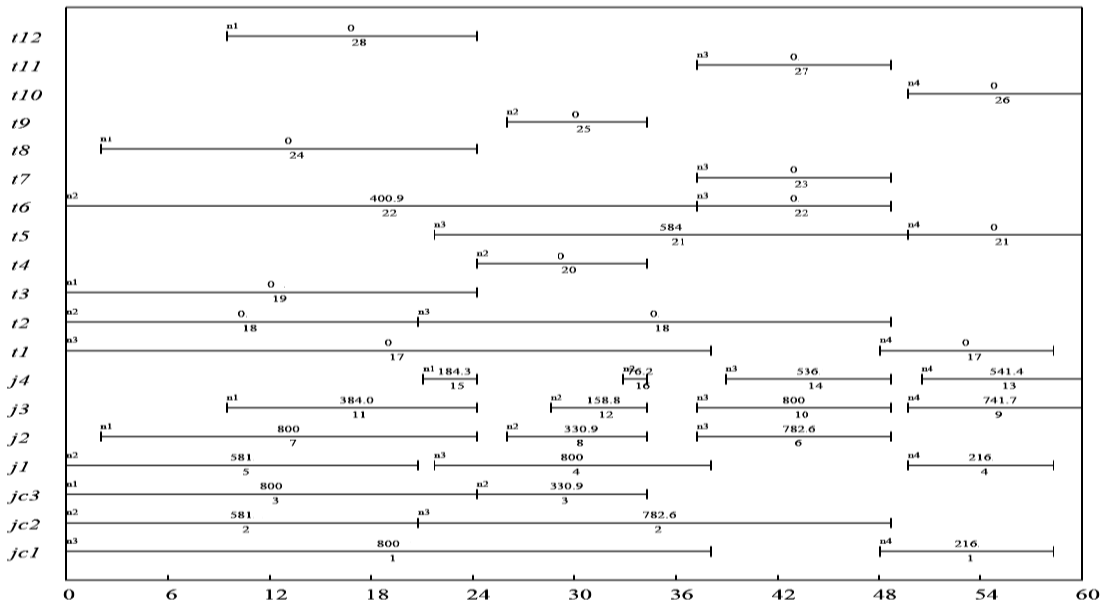

Fig. 4. Gantt chart for scenario 2.

The inventory of the final products from stage 3 is assumed to be UIS. The maximum limit on the storage capacity is 800 m^3 for all intermediate storage tanks. Model statistics and computation results are presented in Table I. With maximization of profit as the objective function, the final product is allowed to be overproduced.

Scenario 1: Continuous Feed Stream

In this scenario, feed to the production plant is considered to be continuous. Minimum events required to give the

feasible solution for this scenario are 4 and on increasing the events the profit increases which suggest that result is not optimal at 4. Since the problem size is very large, it requires high computational effort to solve the model to optimality with zero gap at higher events, therefore a termination criterion of 40000s is set for maximum computational time. The Gantt chart in Fig. 3 clearly captures the condition that feed streams are continuous. *Jc1-jc3* are units for continuous flow from distillation unit, j1-j4 are the processing units, and *t1-t13* are the intermediate storage tanks.

TABLE I: COMPUTATIONAL RESULTS FOR TWO SCENARIOS

Events	Binary variables	Continuous variables	Constraints	Profit (k$)	Relative gap
		Continuous feed stream			
4	168	469	1817	440.84	0
5	210	586	2503	526.51	0
6	252	703	3267	533.38	0.07
		Non-continuous feed stream			
4	168	469	1817	450.01	0
5	210	586	2503	532.09	0
6	252	703	3267	535.76	0.08

Scenario 2: Non-Continuous Feed Flow

This is a real-world scenario, in which the feed of raw materials is not always continuous. Minimum number of events required for generating a feasible solution for this scenario is also 4 and on increasing the events, objective function increase which suggest that function value is not optimal at 4 events, hence it requires more events to generate optimal value. On increasing the events, proposed model start giving gap because of the large model size.

If we compare the objective function value at same events for both scenarios, it is found that the objective function value is higher in case of scenario 2 because non-continuous flow incurs less storage cost. Comparison of two Gantt chart of scenario 1 and 2 also validate this point as the storage profile of tanks *t*1-*t*3 in Fig. 3 is much denser that the storage profile of these tanks in Fig. 4.

VI. CONCLUSION

In this work, a MILP model is developed for short-term scheduling of a general lube-oil production plant. Proposed work made use of powerful technique of STN representation to address material transfer from one stage to another stage, material storage at intermediate stages, stream addition and stream splitting in much simpler way. Comparison is made between two different scenarios of feed flows. It is shown that continuous flow of feed stream may result in higher operating cost due to higher losses related to intermediate storage.

NOMENCLATURE

Indices

i all tasks (processing and storage)
i_{st} storage tasks
i_p processing tasks
j units
n event points

Sets

I tasks
I_p processing tasks
I_{st} storage tasks
I_j tasks which can be performed in unit j
I_s tasks which process states
I_s^p tasks which produce states s
I_s^c tasks which consume states s
J units
J_i units which are suitable for performing task i
J_c units that are operating continuously
J_{nc} units that are operating non-continuously
N event points within the time horizon
S states
S^{IM} states that are intermediates
S^p final product states
S^{in} intermediate states that are not generated by splitting a state or adding other states

S^{im2} intermediate states that are generated by splitting a state
S^{im4} intermediate states that are generated by adding other states
S^{im0} state that split into intermediate states or states added to form intermediate states

Parameters

$st0_s$ initial amount of state s
$st_{i_{st}}^{\max}$ maximum storage capacity for storage task i_{st}
$st_{i_{st}}^{\min}$ minimum storage capacity for storage task i_{st}
$\rho_{i,s}$ proportion of state s produced or consumed by task i
$\xi_{S,S'}$ parameter that relates states s and s'
$t^c_{i'_p,i_p}$ sequence dependent change-over time from task $i'_p$to i_p
DM_s demand of final product state s
H time horizon
$f_{i_p}^{\min}$ minimum flow rate of task i_p
$f_{i_p}^{\max}$ maximum flow rate of task i_p
C_{trans} transition cost
C_{invst} inventory cost

Binary variables

$w(i,n)$ binary variable for assigning task i to an event point n

$z(i_{st},n)$ binary variable to determine if storage task i_{st} stores a nonzero amount at the end of event n

Positive variables

$b(i,n)$ amount processed by task i at event n

$T_f(i,n)$ finish time of task i at event point n

$T_s(i,n)$ start time of task i at event point n

$wt(i'_p,i_p,n)$ 0-1 continuous variable to determine changeover

REFERENCES

[1] C. A. Floudas and X. Lin, "Continuous-time vs discrete-time approaches for short-term scheduling of chemical processes: A review," *Comp. Chem. Eng.*, vol. 28, no. 11, pp. 2109-2129, July 2004.

[2] M. A. Shaik and C. A. Floudas, "Improved unit-specific event-based continuous-time based short-term scheduling model for continuous processes," *Ind. Eng. Chem. Res.*, vol. 46, pp. 1764-1779, Jan. 2007.

[3] M. G. Ierapetritou and C. A. Floudas, "Effective continuous-time formulation for short-term scheduling: 2.Continuous or semi-continuous processes," *Ind. Eng. Chem. Res.*, vol. *37*, pp. 4360-4374, Sept. 1998.

[4] N. F. Giannelos and M. C. Georgiadis, "A novel event-driven formulation for short-term scheduling of multipurpose continuous processes," *Ind. Eng. Chem. Res.*, vol. 41, pp. 2431-2447, Mar. 2002.

[5] M. A. Shaik, C. A. Floudas, J. Kallrath, and H. J. Pitz, "Production scheduling of a large-scale industrial continuous plant: short-Term and medium-term scheduling," *Comp. Chem. Eng.*, vol. 32, pp. 670-686, Aug. 2009.

[6] C. Liza and M. J. Pinto, "Optimal scheduling of a lube oil and paraffin production plant," *Comp. Chem. Eng.*, vol. 29, pp. 1329-1344, Mar. 2005.

[7] M. A. Shaik, M. Bhusan, R. D. Gudi, and A. P. Belliappa, "Cyclic scheduling of continuous multiproduct plants in a hybrid flowshop facility," *Ind. Eng. Chem. Res.*, vol. 42, pp. 5861-5882, Oct. 2003.

[8] M. Joly and J. M. Pinto, "Mixed-integer programming techniques for the scheduling the scheduling of fuel oil and asphalt production," *IChe.*, vol. 81, pp. 427-447, April 2003.

Sanjeev Yadav was born in December 1976 in Noida, India. He completed his bachelor of technology (B.Tech.) in pulp and paper engineering from prestigious Indian Institute of Technology (IIT) Roorkee in the year 2001. He then went on to do M.S. (master of science) at University of Washington, Seattle, USA and obtained his MS degree in year 2007. After that, he joined Indian Institute of Technology (IIT) Delhi to pursue his Ph.D. degree in the Department of Chemical Engineering. He obtained his Ph.D. degree very recently on Nov. 9, 2013. Presently, he is working as an asst. professor at Shiv Nadar University in the Department of Chemical Engineering. His research interest lies in process optimization, bio-energy and environment, pulp and paper processes.